End Cap Adapter Quote Request Form

To request a quote, simply call 800-627-1033 with the following information:

CUSTOMER NAME: _____ **CONTACT:** _____

CUSTOMER NO.: _____ **PHONE NO.:** _____ **FAX NO.:** _____

SPECIFICATIONS

1. Machine Make & Size _____

2. Material:
   - ❑ Nitralloy 135m Steel Nitride Hardened
   - ❑ 4140 Heat Treated Steel
   - ❑ H-13 Heat Treated and Nitrided Steel
   - ❑ D-2 Heat Treated Steel
   - ❑ I.D. Surface Treatments (Chrome, TiN, Armoloy, Other)

3. Dimensions (to .001"):
   - A. Overall Length _____
   - B. Nozzle Thread Depth _____
   - C. Flange Width _____
   - D. Counterbore Length _____
   - E. Nozzle End Diameter _____
   - F. Thread Size & Pitch _____
   - G. Interior Angle _____
   - H. Nozzle Bore Diameter _____
   - I. Rear Opening _____
   - J. Counterbore Diameter _____
   - K. Depth of Straight Bore _____
   - L. Major Diameter _____
   - M. Length of Straight _____
   - N. Bolt Counterbore Depth (if any) _____
   - O. Bolt Counterbore Diameter (if any) _____
   - P. Bolt Hole Diameter _____
   - Q. Number of Bolt Holes _____
   - R. Bolt Circle Diameter _____
   - S. Bolt Hole Position (if not on center) _____
   - T. Nozzle End Width _____

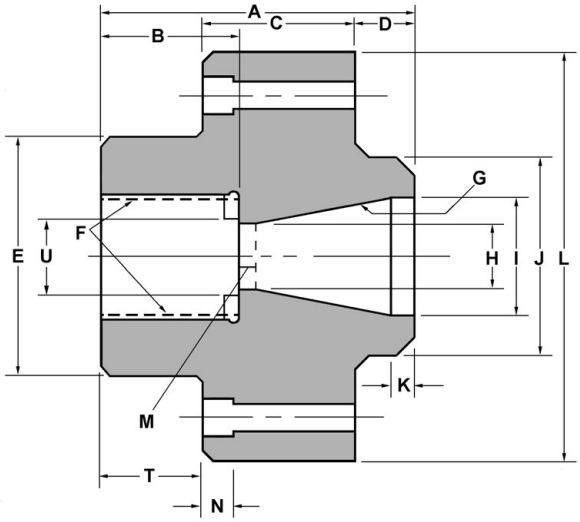

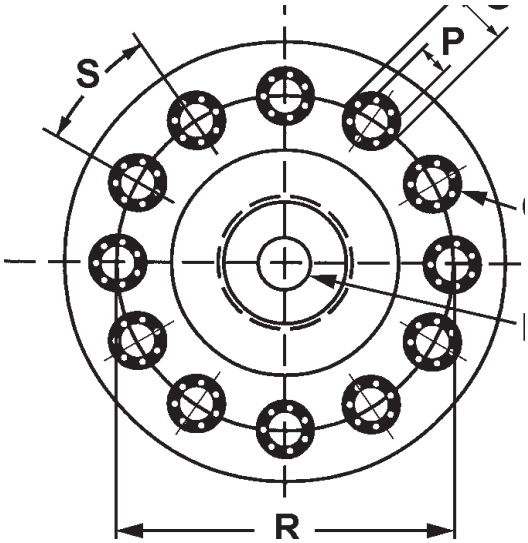

7925 N. Clinton St., Fort Wayne, IN 46825 USA • Web: www.servicesforplastics.com • E-mail: sales@servicesforplastics.com
Toll Free Phone: 800-627-1033 • Fax: 800-482-4059 • Local Phone: 260-482-9211 • Fax: 260-483-8139